…… 1
…… 1
…… 1
…… 3
…… 3
…… 3
…… 5
…… 5
…… 5
……30
……32
……34
……34
……35
……36
……46
……46
……49
……51
……51
……52
……53
……55
……55
……55
……56
……57
……57
……58
……60
……61
……62
……62
……63
……63
……63
……64
……64
……64
……65
……65
……65

……65
……66
……66
…… ····¶01(··)1(··)1(··)

HJ941-2018

- 2015.1.1
- 2007.11.1
- 2018.10.26
- 2017.6.27
- 2020.9.1
- 2019.1.1
- 2006.1.8
- [2014]119 2014.12.29
- 34 2015.6.5
- [2015]4 < > 2015.1.9
- [2011]35 2011.10.20
- [2017]30 < “ ” > 2017.2.23
- 591 2011.12.1
- 15 2021 2021.1.1
- 2015

- 2019.1.1
- 2012.9.1
- 2018.12.1
- 2018.11.30
- <

1

1

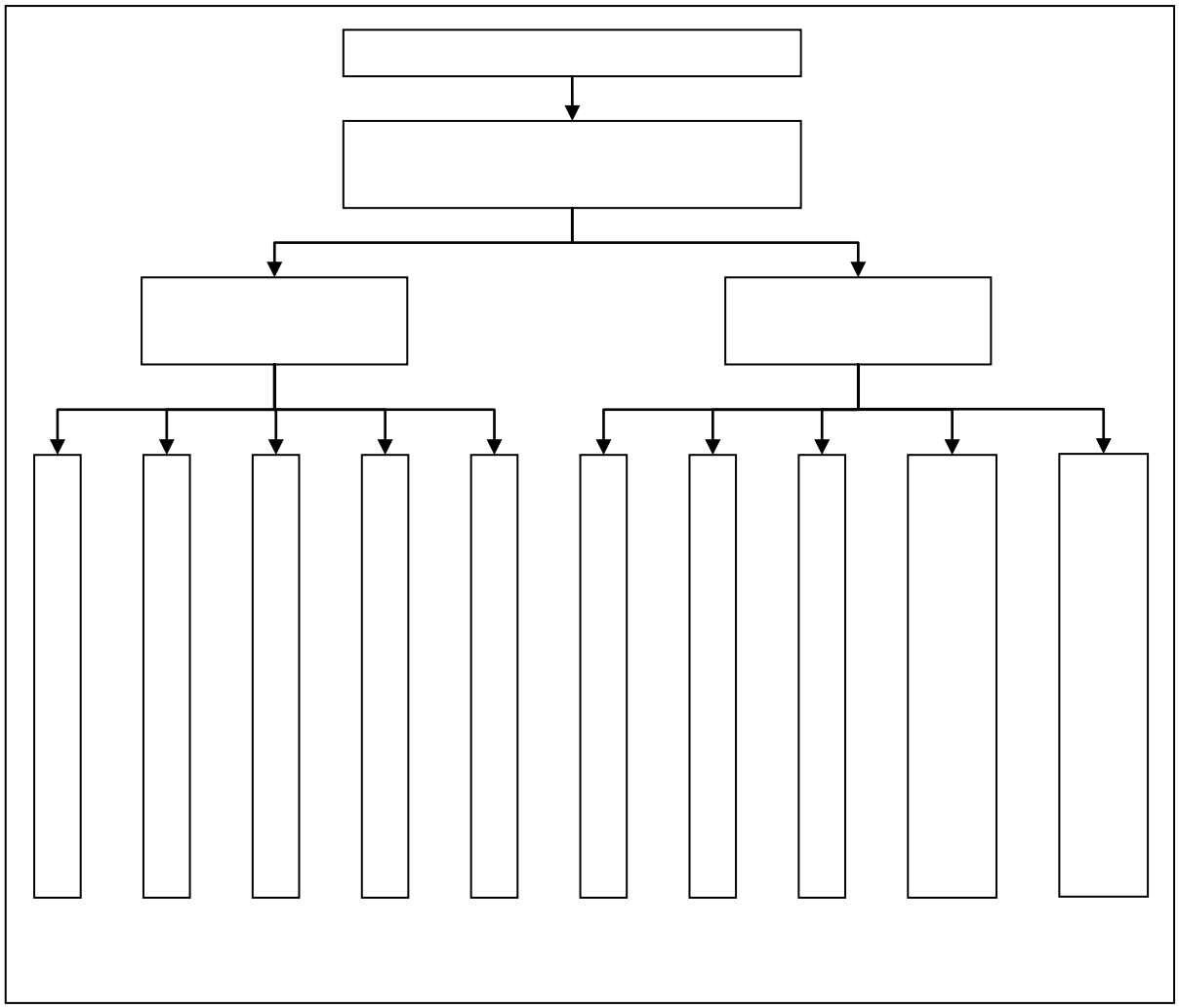

2

“

”

3

4

5

6

7

1

	9137120075178167XM
	2
	2003.7
	2020.5
	0531-75819931
	1400
	4500

36.307649° 117.537144°

1 2

4

2

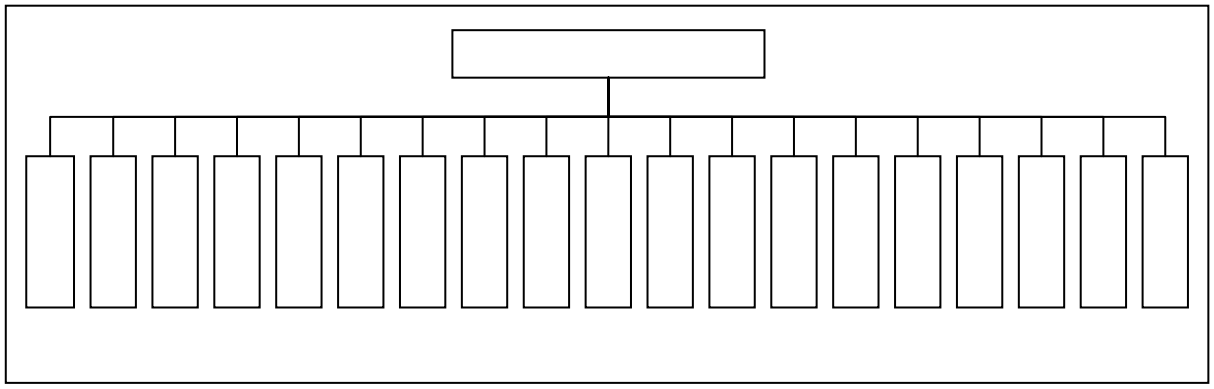

		2 120t 2 120t LF 3 2 2
		2 10 2 1 18 2 3 2 12 12 12 20 2 6
		4 500t/d
		* *
		2 110KV
	2 15 m^3 1 1 2 8 m^3 1 1 2 5 m^3 1 1 1 $10m^3$ 1 $10m^3$ 1 $10m^3$ 1 $10m^3$ 4 $80m^3$ $60m^3$ $30m^3$ $3.4m^3$ 1 3 $1000m^3$ 2 $650m^3$ 1 $650m^3$ 1 $1000m^3$ 1 $200m^3$ 1 $400m^3$ 1 $500m^3$ 1 $1000m^3$ 2 $105m^3$ 2 $150m^3$ 2 $500m^3$ 8 10	
		8 10

3

1		120t	2	
2		120t	3	
3		500t/d	4	
4			4	

		120t 2 150
		120t LF 3 150
		2 164.2 2 171.5
		4 500t/d
		110kV
		1# OG 1 1 1 1 3500m^3/min 2000kW 1 1 1 1 1 75m 1.68m DA001 3# OG 1 1 1 1 3500m^3/min 2240kW 1 1 1 1 1 75m 1.68m DA002 1# 1#2# 1 1 35m

		4.78m DA003 3# 1 1 35m 4.78m DA004 3# 1 1 35m 2.32m DA005 1# 1 1 36m 5.2m DA006 3# 1 1 36m 5.2m DA007 1 18m 1.8m DA008 1 18m 1.8m DA009 1# 110500m³/h 120740m³/h 560kW+220kW 2 1 25m 1.7m DA010 2# 110500m³/h 120740m³/h 560kW+220kW 2 1 25m 1.7m DA011 3# 110500m³/h 120740m³/h 560kW+220kW 2 1 27m 1.7m DA012 4# 110500m³/h 120740m³/h 560kW+220kW 2 1 27m 1.7m DA013 1# 2# 220000m³/h 560kW 1 1 24m 2.8m DA014 3# 4# 230000m³/h 710kW 1 1 19.5m 2.5m DA015 169110m³/h 315kW 1 1 24m 2.8m DA016 1 1 25m 1.8m DA017 1 1 25m 2.2m DA018 1# 2# 3# 3 3 15m 0.5m DA019 DA020 DA021
		SS

3

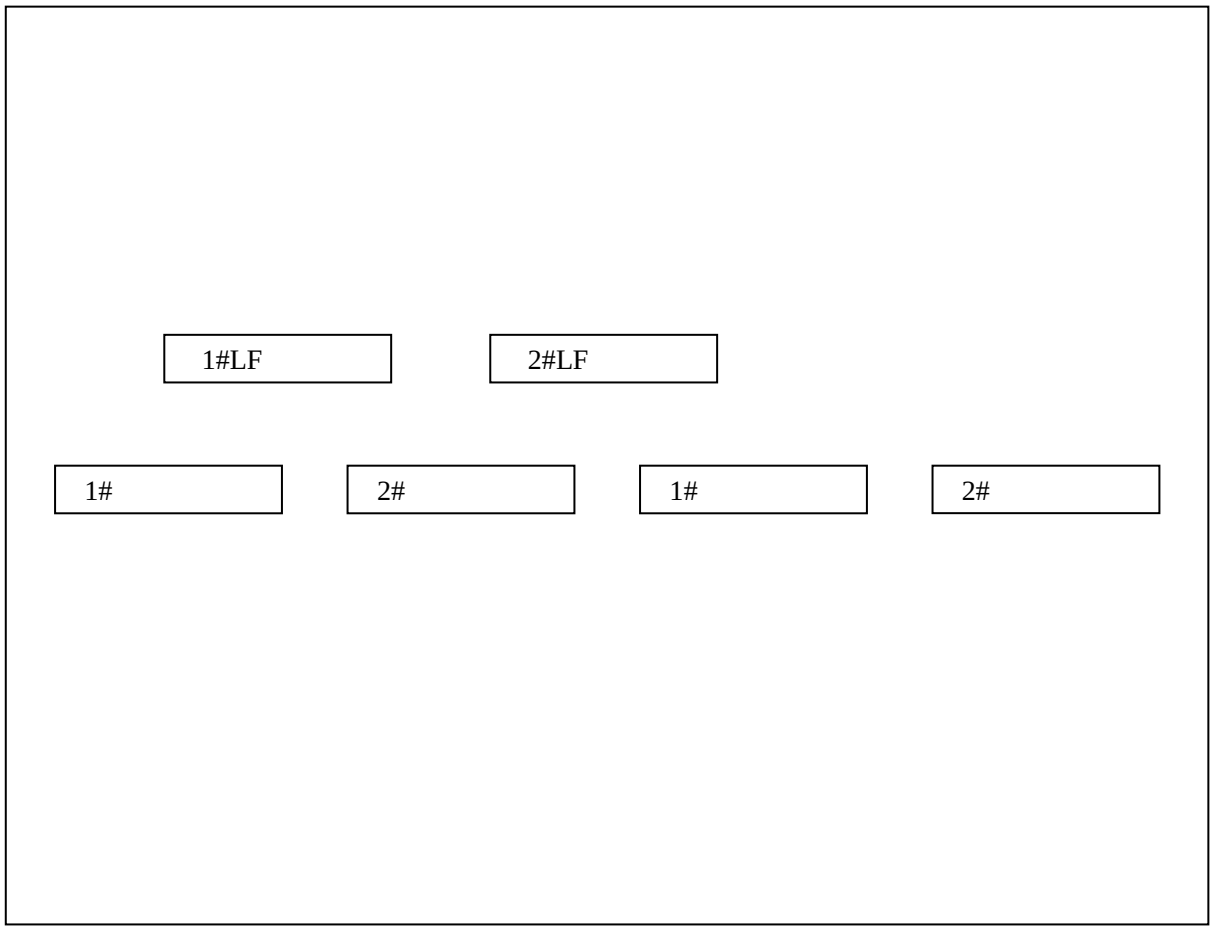

120t

240T

50+50T

10T 17.3

240T

32T

1.7m DA010

2# 1 25m

1.7m DA011

3# 1 27m

1.7m DA012

4# 1 27m

1.7m DA013

1# 2# 1

24m 2.8m DA014

3# 4# 1

19.5m 2.5m DA015

1

24m 2.8m DA016

1 1 25m

1.8m DA017

1 1 25m

2.2m DA018

1# 2# 3# 3 3

15m 0.5m DA019 DA020 DA021

SS

		2 110V
		2 1 2 1# 1 22m 1.38m DA022 1# 1 22m 1.48m DA023 2# 1 22m 1.38m DA024 2# 1 22m 1.48m DA025 1 22m 1.38m DA026 1 22m 1.38m DA027 1 25m 1.38m DA028 1 25m 1.68m DA029 1 25m 1.38m DA030 1 25m 1.68m DA031
		SS

1 1 2

1150 ~1280

1# E1

R1 3/5 E1 2#

1 E2 7 E2 3#

6

6 6 114 12.5m

1200t

6 6

1# 6 2#

6 3#

10

1080mm

1280mm 850mm

P&F

4-1~ 4-3

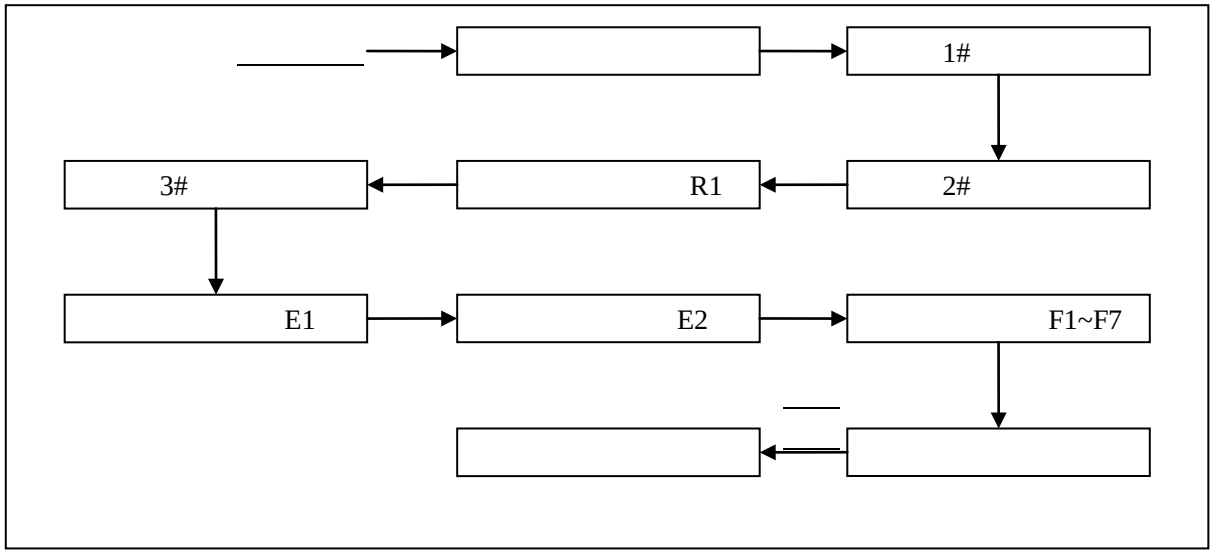

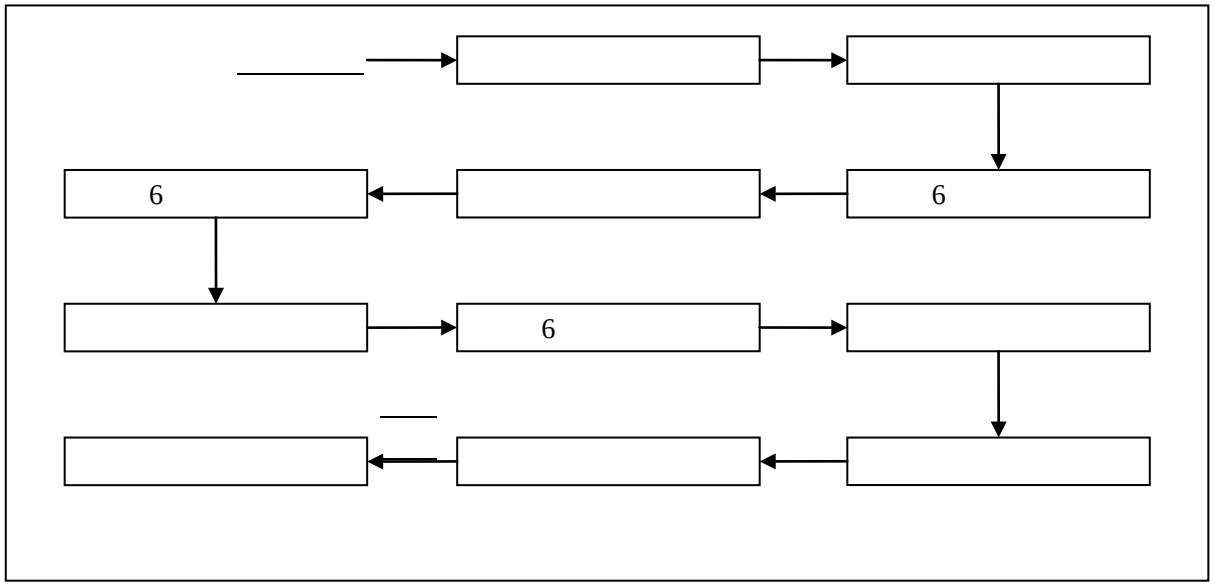

7

1		2		
2		2		
3		2		
4		4		
5		3		
6		2		
7	RO	2		
8	RO	3		

21		2		
22		2		
23		4		
24		2		
25		13		
26		3		
27		3		
28		3		
29		2		
30		8		
31		6		
32		9		
33		2		
34		3		
35		2		
36		2		
37		1		
38	24500	1		
39	23000	1		
40	15000	1		
41		3		
42		1		
43		2		
44		1		
45		1		
46		1		
47		4		
48		2		
49		2		
50		2		
51		2		
52		2		
53		2		
54		2		
55		1		
56		1		
57		1		
58	1000m³	3		
59	650m³	2		

RO

5#

RO

RO

RO

6-1

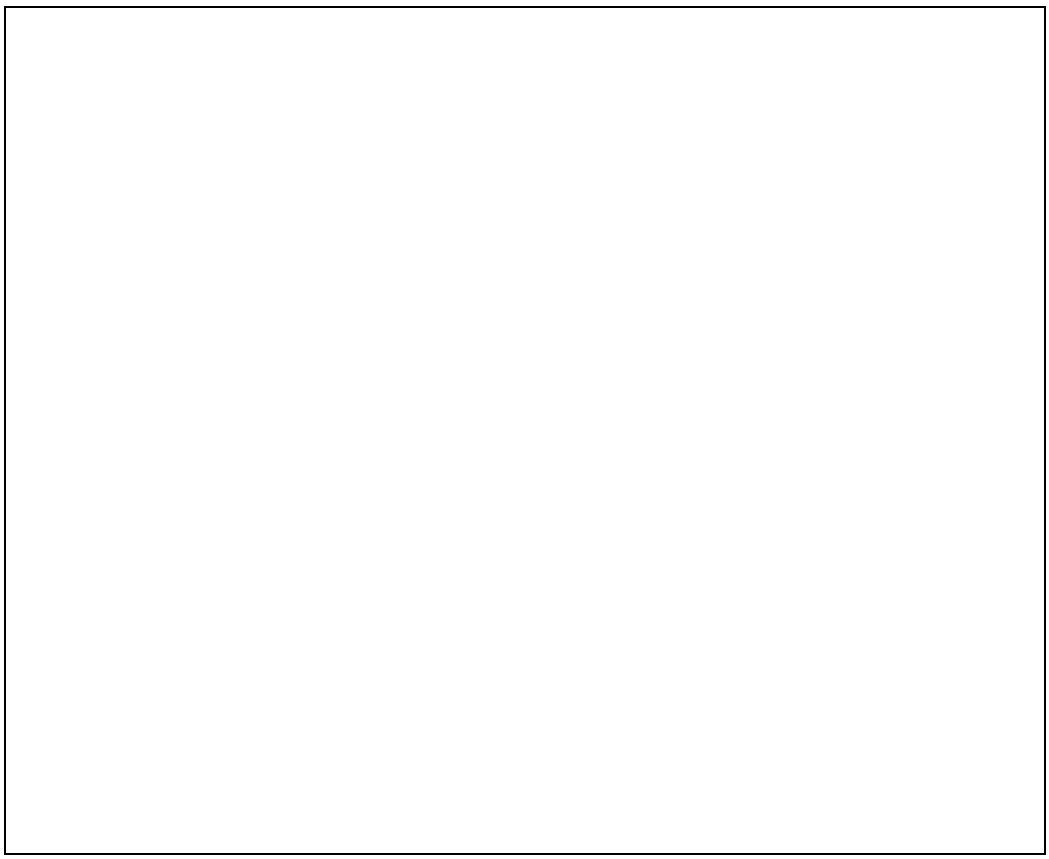

1. → → → → →

→

2. → → → → → →

→

2-3mm

ï ئم , ¬ ,

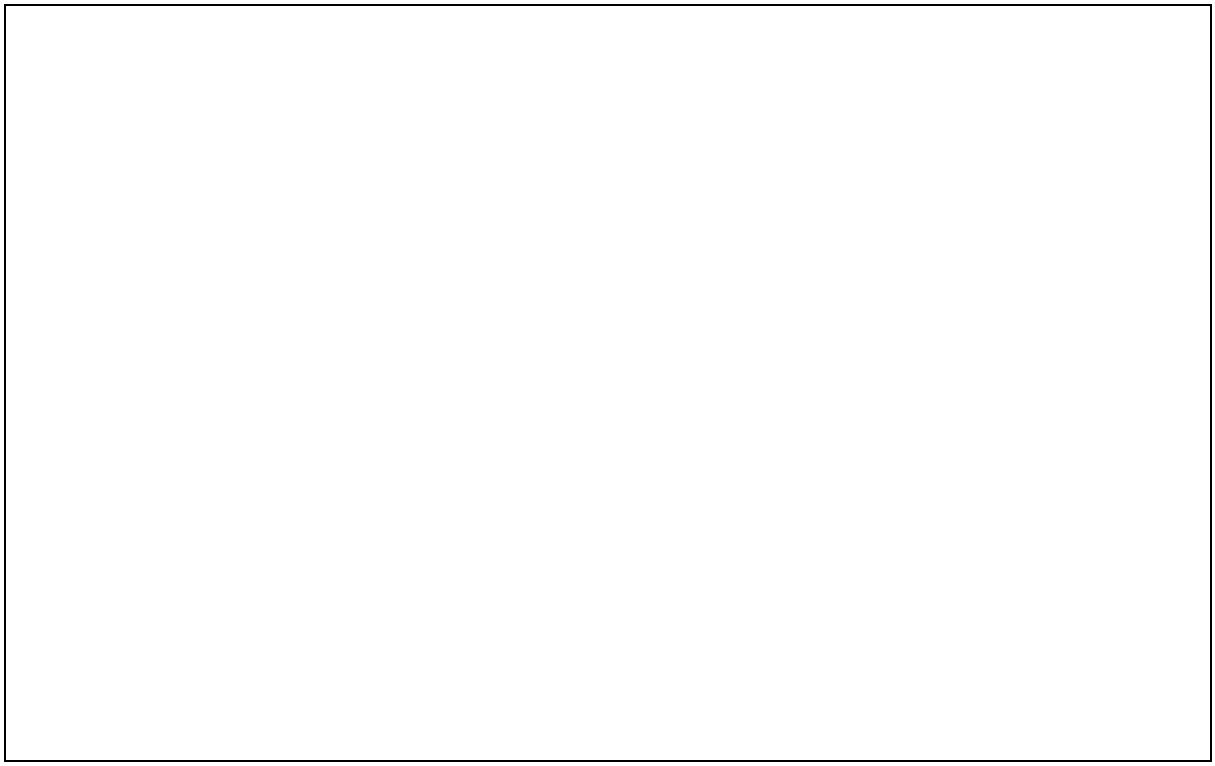

C.

2000m^3/h

RO NF UF

RO NF UF

8

1	2 220t/h +2 65MW	
2	3 100t/h 15MW	2 1
3	2 90t/h 6MW	1 1
4	2 40t/h 7MW	
5	1 50t/h	
6	2 100t/h	
7	1 25t/h	

1	1 74t/h 3# +1 48MW	
2	1 18.5t/h 1#2# 2 41.5t/h 3#4# +1 15W	1#2#
TRT		
1	1 10MW 1# TRT	
2	1 3MW 2#3# TRT	
3	1 12MW 4# TRT	
4	1 12MW 5# TRT	

1	15	2		1 1

2	8	2		2 1 1
3	5	2		1 1

2 220t/h

2 220t/h SCR

1 80m 7m DA032

SCR

SCR

$$4NH_3+6NO \rightarrow 5N_2+6H_2O$$

$$8NH_3+6NO_2 \rightarrow 7N_2+12H_2O$$

800

~1000

$$2NaHCO_3+SO_2 \rightarrow Na_2SO_3+2CO_2+H_2O$$

$$2NaHCO_3 \rightarrow Na_2CO_3+CO_2+H_2O$$

$$Na_2CO_3+SO_2 \rightarrow Na_2SO_3+CO_2$$

$$2Na_2SO_3+O_2 \rightarrow 2Na_2SO_4$$

3 100t/h

3 100t/h SCR

1 100m 5.85m DA033

SCR

SCR

$$4NH_3+6NO \rightarrow 5N_2+6H_2O$$

$$8NH_3+6NO_2 \rightarrow 7N_2+12H_2O$$

80%

$$SO_2+H_2O \rightarrow H_2SO_3$$

$$CaO+H_2O \rightarrow Ca(OH)_2$$

$$H_2SO_3+Ca(OH)_2 \rightarrow CaSO_3+H_2O$$

$$2CaSO_3+O_2 \rightarrow 2CaSO_4$$

2 90t/h 1 50t/h 1 25t/h 2 40t/h 2 100t/h

2 90t/h SNCR 1 80m 4.57m DA034 1 50t/h 1 25t/h SNCR 1 50m 2.60m DA035 2 40t/h SNCR 1 50m 3.24m DA036 2 100t/h SNCR 1 100m 5.85m DA037

2 90t/h 1 50t/h 1 25t/h 2 40t/h 2 100t/h

$5mg/m^3$

SNCR

$$CO(NH_2)_2 \rightarrow NH_3+HNCO$$

$$HNCO+H_2O \rightarrow NH_3+CO_2$$

$$4NH_3+6NO \rightarrow 5N_2+6H_2O$$

$$8NH_3+6NO_2 \rightarrow 7N_2+12H_2O$$

$$2NH_3+SO_2+H_2O \rightarrow (NH_4)_2SO_3$$

$$2(NH_4)_2SO_3+O_2 \rightarrow (NH_4)_2SO_4$$

220t/h 100t/h

2

9

			/m	/m
DA001	1#		1.68	75
DA002	3#		1.68	75
DA003	1# 1#2#		4.78	35
DA004	3#		4.78	35
DA005	3#		2.32	35
DA006	1#		5.2	36
DA007	3#		5.2	36
DA008			1.8	18
DA009			1.8	18
DA010	1#		1.7	25
DA011	2#		1.7	25
DA012	3#		1.7	27
DA013	4#		1.7	27
DA014	1# 2#		2.8	24
DA015	3# 4#		2.5	19.5
DA016			2.8	24
DA017			1.8	25
DA018			2.2	25
DA019	1#		0.5	15
DA020	2#		0.5	15
DA021	3#		0.5	15
DA022	1#		1.38	22
DA023	1#		1.48	22
DA024	2#		1.38	22
DA025	2#		1.48	22

DA026			1.38	22
DA027			1.38	22
DA028			1.38	25
DA029			1.68	25
DA030			1.38	25
DA031			1.68	25
DA032	2 220t/h		7	80
DA033	3 100t/h		5.85	100
DA034	2 90t/h		4.57	80
DA035	1 50t/h 1 25t/h		2.60	50
DA036	2 40t/h		3.24	50
DA037	2 100t/h		5.85	100

“ ”

HJ941-2018 A

10

			OG

		SO_2 NO_X	
		SO_2 NO_X	SCR SCNR
		/	
		pH COD BOD_5 SS	
		RO NF UF	

11

1			6	3 3
2			/	
3			2	
4			2	
5		100t/h 220t/h 40t/h 90t/h	4	

				m		
	27		NW	1753	1406	
	28		NW	1777	732	
	29		NE	1785	2751	
	30		NE	1834	1624	
	31		NW	1846	551	
	32		W	1909	792	
	33		E	2046	1905	
	34		S	2100	698	
	35		N	2102	894	
	36		S	2155	760	
	37		E	2181	369	
	38		NW	2308	617	
	39		NE	2324	2084	
	40		SW	2348	2357	
	41		SE	2457	593	
	42		S	2470	1789	
	43		W	2470	1803	
	44			2471	691	
	45		S	2490	933	
	46		NW	2529	903	
			NW	2550	1088	
	48		SW	2663	905	
	49		NW	2697	592	
	50		NE	2703	365	
	51		SW	2706	899	
	52		E	2780	2468	
			SW	2813	1208	
			SE	3015	1761	
			NW	3072	507	
	5			3270	367	
	57			3281	967	
	58		S	3340	611	

				m		
	66		W			

3	37%	7647-01-0		12.208	7.5
4	20%	1336-21-6		21.406	10
5		74-98-6		0.022	10
6		64-17-5		0.039	500
7		8032-32-4		0.033	10
8		7664-38-2		0.075	10
9		50-00-0		0.004	0.5
10		7664-39-3		0.012	1
11		7697-37-2		0.057	7.5
12		7664-93-9		0.129	10
13		108-88-3		0.009	10
14		1330-20-7		0.009	10
15		71-43-2		0.009	10
16		67-64-1		0.004	10
17		64-19-7		0.016	10
18		64-18-6		0.024	10
19		7681-	0.024	10	

“ [- Q2-M2-E1 + - Q2-M2-E3] ”

8L

175kg

1

1

-1 1460m

-2 4010m -1

860m -2 1590m

2

-1 1610m

-2 4410m -1

940m -2 2170m

2

1

TNT 3712.97kg 22.1m 61.2m 109.7m

65.0m

2

TNT 2973.72kg 20.4m 56.8m 101.9m

58.3m

3

-1

-2 40m -1

-2 20m

10min 4770kg

7m*7m*1.8m

4

10min 5676kg 7m*7m*1.8m

5

-1

-2 60m -1

-2 30m

10min 954kg

9.8m*1.8m*0.7m

-1

-2

“ 3.3.4 ”

20000m^3/d 150m^3/d

14400m^3/d 20000m^3/d

3600m^3 32m 23m

5m

3.3.1

34400m^3/d 20150m^3/d

3900m^3

11000m^3

15

1		107		18 12 7 57 13
2		3		
3		4		
4		2		
5		5		
6		64		31 31 2
7		11		
8		345		92 62 191
9		15		
10		40m		

11		300		
12				
13				
14		21		
15		6		
16				
17		1		
18		3019		345 527 982 1111 54
19		2		
20		13		
21		36		23 13
22		61		16 40 5
23		13		
24		70		20 50
25		66		20 46
26		27		
27		4		3 1
28		3		
29		3		
30		13		
31		3		
32		3		
33		9		

16~ 20

			13516347777
			13181762469
			18663407717
			13561713679
			13963440202
			13356226061
			18263413309
			18263480788
			18263439261
			13863443489

			13906345883
			13656348369
			13054811904
			13516340708
			13863466628
			18663407717
			13706389690
			15263485327
			13455893077
			13563413316
			13506348688
			13625431174
			13561710577
			13863408419
			13563413358
			13561716835
			15006345383
			13963487894
			13963463496
			13563466090
			13563475386
			15263426599
			13963421398
			13563466673
			13468250659
			13863408867
			13863461104
			19863412175
			15866340126
			15163422658
			18763416978
			15263463599
			15163468349
			13963463188
			13863428508
			18663447998
			13516349138
			13863466196

			13863411239
			13031764751
			18663407717
			13863461628
			13863403511
			13563479166
			13002763677
			13906345883
			13656348369
			13054811904

			18263413309
			15263485327
			15263426599
			13516341183
			15006342966
			15063416700
			13563418153
			13563479871
			13863487830
			13616347127
			13863463533
			15863400570
			18263457010
			13561710888
			15263478776
			13676349630
			15263485327
			15263478769
			15263409152
			13561705797
			13616347127
			13563438164
			13563460816
			19863412175
			13455494149

			15725897603
			13706389690
			19819401163
			13706379690
			13863401361
			15006836302
			13906341487
			13863426070
			13468267756
			13863409993
			13563415002

)»(h

			13561700881
			13963401894
			13706385210
			18263436636
			16212133456
			15263455168
			15863407885
			13863408419
			18663462586
			13963477566
			13676343300
			15763411851

			18263439261
			13561710577
			13676349515
			13563417427
			15263414628
			13563469217
			15698101896
			13863457846
			13963445933
			13863457846
			13863445044
			15163423034
			18763436533
			13863449620
			15263463372
			15263463599

1

220t/h

2

7m 7m 1.8m

9m 3m 0.5m

8m 5m 0.2m 220t/h 12.4m

8.05m 0.85m 100t/h 9.8m 1.8m

0.7m

1 1000m^3

1 1000m^3

1 1#2#3#

950m^3 1 4#5# 950m^3

1# 950m^3

2#3# 2600m^3 4# 3900m^3 5# 3900m^3

3600m^3 7400m^3

220t/h 100t/h

7

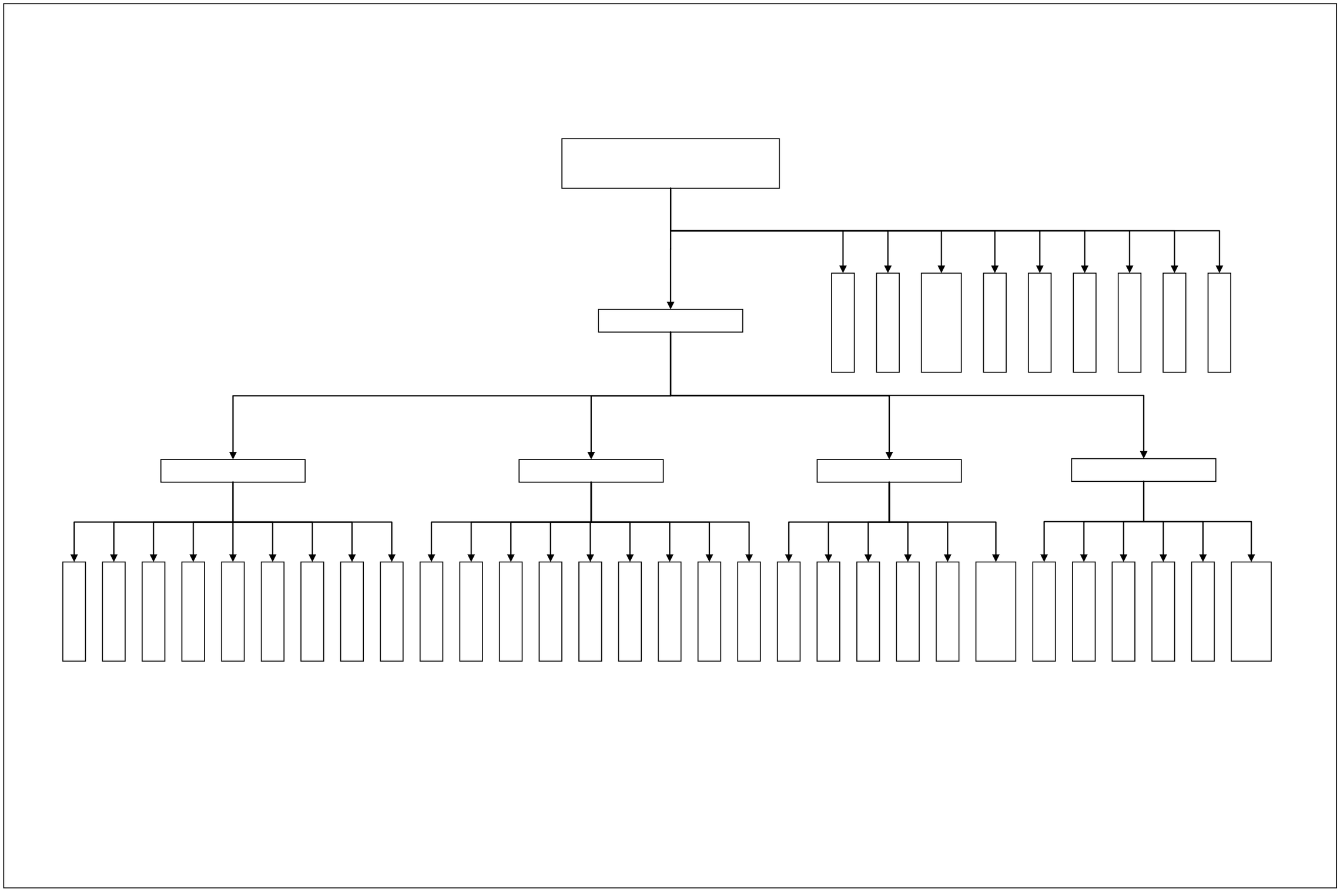

1

2

1

1

2

3

4

5

2

1

2

3

3

1

2

3

4

5

6

2 120

3

4

8

1

2

9

1

2

3

10

1

2

3

4

“ ”

1 24

2

24

3

4 220t/h 3 100t/h

5 COD

6

7

8 24

24

24

1

2

3

4

5

6

7

CO

1

2

3

1

2

3

4

5

120

119

0531-76126717

0531-76210781

0531-75819123 0531-75819456

0531-75819388

0531-75819444 0531-75819410 0531-75819162

0531-75819502

0531-75819152

10

t

11		13625431174
12		15666344861

13356226011

19863482088

13561718556

18963466666

13806340056

13561718888

13963409088

13326226688

0531-76527344

0531-76655037

0531-76622234

0531-76522545

0531-76522992

0531-76522446

3

8

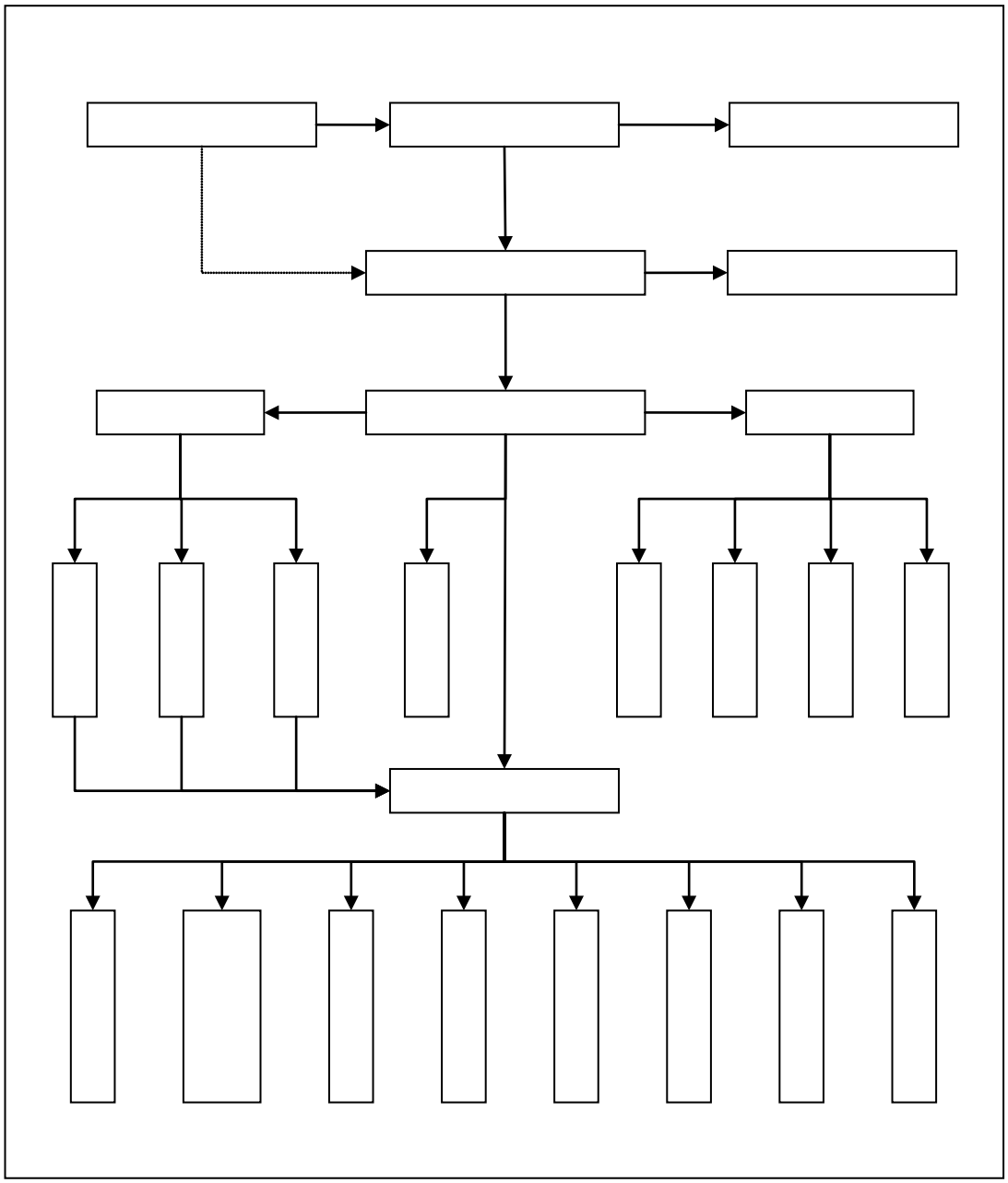

4

119

5

1

1

2

3

4

6

7

24

0531-75819123 0531-75819456

0531-75819388

0531-75819444 0531-75819410 0531-75819162

0531-75819502

0531-75819152

24

22

1		119
2		120
3		0531-77996925
4		0531-77996925
5		0531-76110933
6		0531-77996931
7		0531-76114187
8		0531-76287977
9		110
10		0531-76260279
11		13625431174
12		15666344861

8

2

1

1

1

2

3

4

1

2

3

4

1

2

3

4

5

6

7

1

2

3

4